# English Phonology

## Vowels

# The Nature of Vowels

- Vowels are the central element in the syllable

# The Nature of Vowels

- Vowels are the central element in the syllable
- often described as the head, i.e., the crucial core of the syllable

# The Nature of Vowels

- Vowels are the central element in the syllable
- often described as the head, i.e., the crucial core of the syllable
- may bear stress or tone

# The Nature of Vowels

- Vowels are the central element in the syllable
- often described as the head, i.e., the crucial core of the syllable
- may bear stress or tone
- native speakers' feelings about the number of syllables in a word

- Catford (1977) describes vowels as:

``a class of pulmonic pressure sounds normally voiced, with a maintainable central oral approximant or resonant dorso-domal, or pharyngeal articulatory channel"

- Catford (1977) describes vowels as:

``a class of pulmonic pressure sounds normally voiced, with a maintainable central oral approximant or resonant dorso-domal, or pharyngeal articulatory channel"

- we describe vowels based on their position within the oral cavity

- Catford (1977) describes vowels as:

``a class of pulmonic pressure sounds normally voiced, with a maintainable central oral approximant or resonant dorso-domal, or pharyngeal articulatory channel"

- we describe vowels based on their position within the oral cavity
- supplemented by any secondary articulations such as tone, stress, nasality, etc.

- Catford (1977) describes vowels as:

``a class of pulmonic pressure sounds normally voiced, with a maintainable central oral approximant or resonant dorso-domal, or pharyngeal articulatory channel"

- we describe vowels based on their position within the oral cavity
- supplemented by any secondary articulations such as tone, stress, nasality, etc.
- the IPA vowel chart is based on the position of the vowels vis-à-vis the shape of the oral cavity

# Vowels and other sounds

- What distinguishes vowels from:
  - obstruents
    - can’t bear stress or tone;
    - can’t be the *head* of a syllable

# Vowels and other sounds

- What distinguishes vowels from:
  - obstruents
    - can't bear stress or tone;
    - can't be the *head* of a syllable
  - sonorant consonants
    - not central in syllable
    - not head of syllable
    - except for syllabic sonorants as in *butter*

# Vowel Criteria

- Primary criteria for describing vowels
  - distance between the top of the tongue and the roof of the mouth

# Vowel Criteria

- Primary criteria for describing vowels
  - distance between the top of the tongue and the roof of the mouth
  - position (forward or back) in the oral cavity

# Vowel Criteria

- Primary criteria for describing vowels
  - distance between the top of the tongue and the roof of the mouth
  - position (forward or back) in the oral cavity
  - shape of the lips

# Vowel Criteria

- Primary criteria for describing vowels
  - distance between the top of the tongue and the roof of the mouth
  - position (forward or back) in the oral cavity
  - shape of the lips
- Further vowel criteria to consider:
  - tenseness; tension of muscles in oral cavity

# Vowel Criteria

- Primary criteria for describing vowels
  - distance between the top of the tongue and the roof of the mouth
  - position (forward or back) in the oral cavity
  - shape of the lips
- Further vowel criteria to consider:
  - tenseness; tension of muscles in oral cavity
  - oral vs nasal: raised or lowered velum

# Vowel Features

a. Height:

# Vowel Features

a. Height: High

# Vowel Features

a. Height: High Mid

# Vowel Features

a. Height: High Mid Low

# Vowel Features

a. Height: High Mid Low

b. Backness:

# Vowel Features

a. Height: High Mid Low

b. Backness: Front

# Vowel Features

a. Height: High Mid Low

b. Backness: Front Central

# Vowel Features

| | | | | |
|---|---|---|---|---|
| a. | Height: | High | Mid | Low |
| b. | Backness: | Front | Central | Back |

# Vowel Features

| | | | | |
|---|---|---|---|---|
| a. | Height: | High | Mid | Low |
| b. | Backness: | Front | Central | Back |
| c. | Lip shape: | | | |

# Vowel Features

| | | | | |
|---|---|---|---|---|
| a. | Height: | High | Mid | Low |
| b. | Backness: | Front | Central | Back |
| c. | Lip shape: | Round | | |

# Vowel Features

| | | | | |
|---|---|---|---|---|
| a. | Height: | High | Mid | Low |
| b. | Backness: | Front | Central | Back |
| c. | Lip shape: | Round | Spread | |

# Vowel Features

| | | | | |
|---|---|---|---|---|
| a. | Height: | High | Mid | Low |
| b. | Backness: | Front | Central | Back |
| c. | Lip shape: | Round | Spread | Neutral |

# The Vowel Space

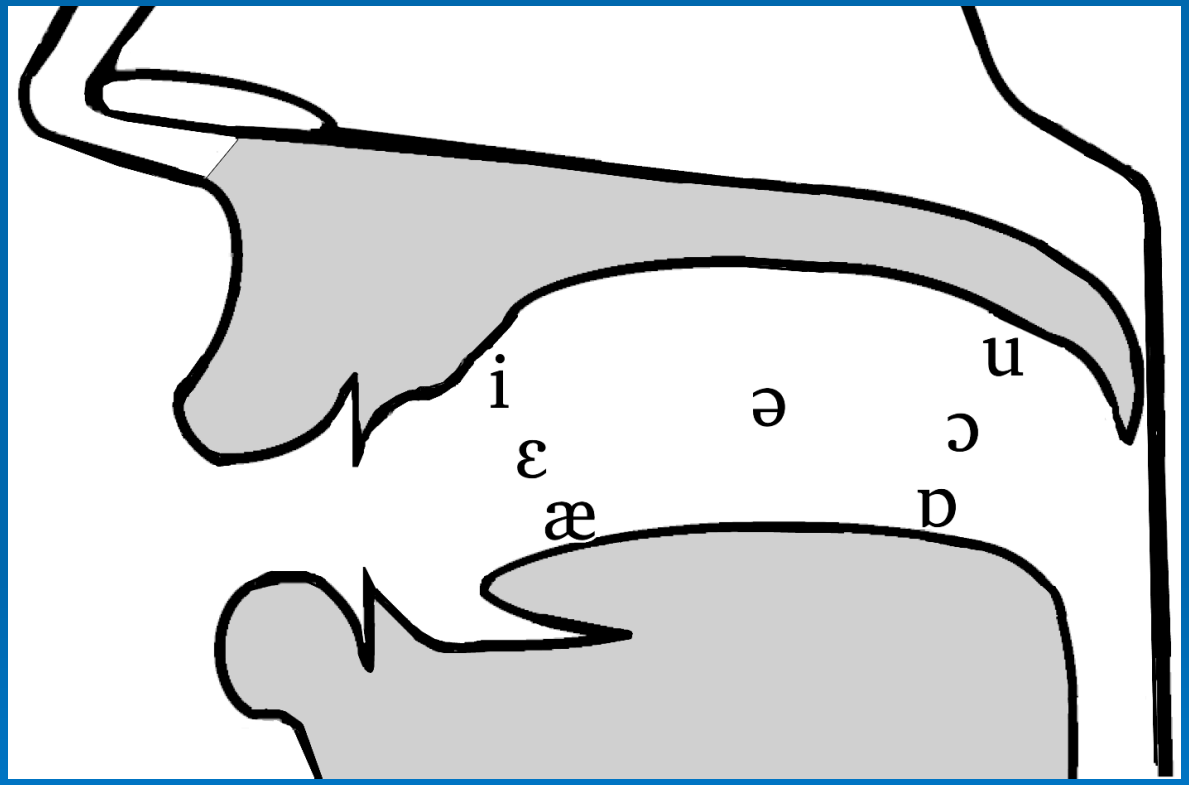

# IPA Vowel Chart

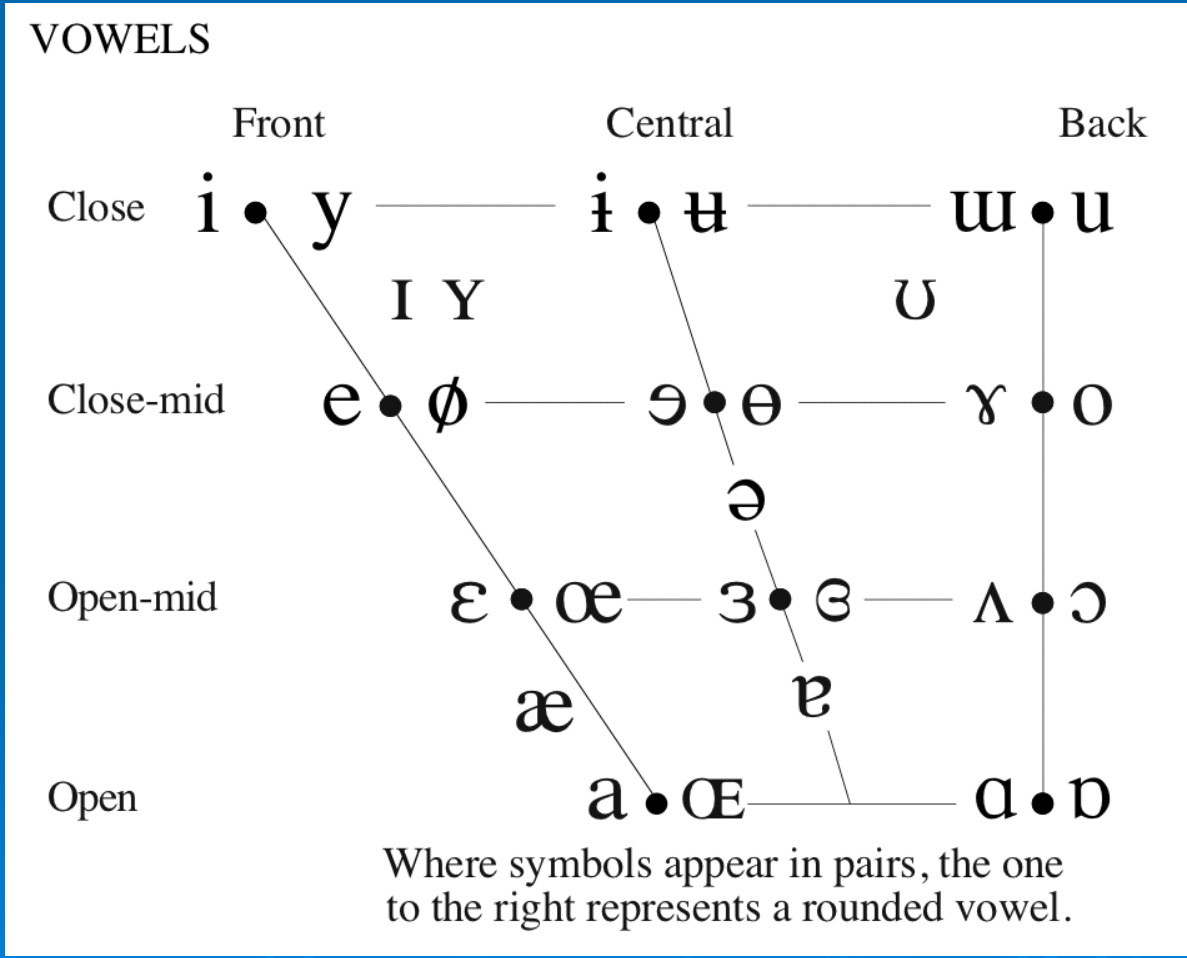

# The Cardinal Vowels

- The Cardinal Vowels are an idealized interpretation of the vowels

# The Cardinal Vowels

- The Cardinal Vowels are an idealized interpretation of the vowels
- it places them at absolute points within the vowel space

# The Cardinal Vowels

- The Cardinal Vowels are an idealized interpretation of the vowels
- it places them at absolute points within the vowel space
- first proposed by the famous British phonetician, Daniel Jones

# The Cardinal Vowels

- The Cardinal Vowels are an idealized interpretation of the vowels
- it places them at absolute points within the vowel space
- first proposed by the famous British phonetician, Daniel Jones
- basic idea is that three vowels, [i], [u], and [ɑ] have articulatory definitions

# The Cardinal Vowels 2

- [i] is produced with the tongue as far forward and as high in the mouth as is physically possible, with the lips spread

# The Cardinal Vowels 2

- [i] is produced with the tongue as far forward and as high in the mouth as is physically possible, with the lips spread
- [u] is produced with the back of the tongue as far back and as high in the mouth as is possible, with the lips rounded

# The Cardinal Vowels 2

- [i] is produced with the tongue as far forward and as high in the mouth as is physically possible, with the lips spread
- [u] is produced with the back of the tongue as far back and as high in the mouth as is possible, with the lips rounded
- [ɑ] is produced at the other extreme, with the tongue as low and as far back in the mouth as possible

# Primary Cardinal Vowels

- this gives three reference points from which the other vowels can be placed

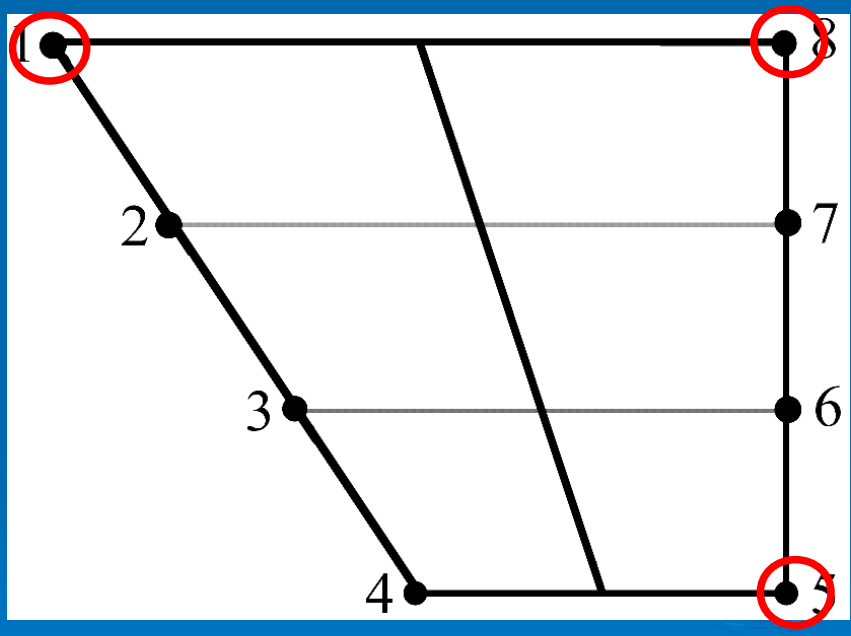

# Primary Cardinal Vowels

- this gives three reference points from which the other vowels can be placed
- other vowels are `auditorily equidistant' between these three vowels and are arranged in four degrees of height: close, close-mid, open-mid, and open

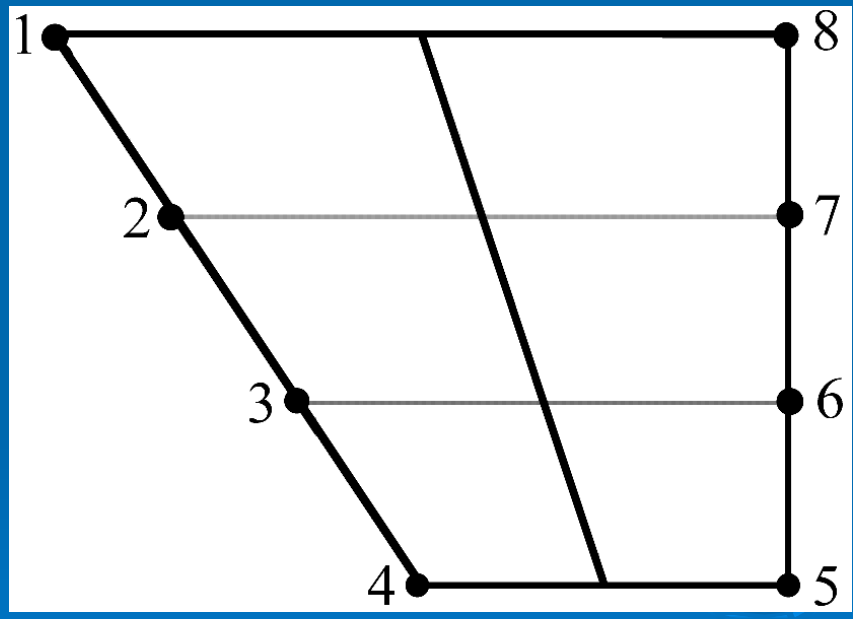

# Primary Cardinal Vowels

- this gives three reference points from which the other vowels can be placed
- other vowels are `auditorily equidistant' between these three vowels and are arranged in four degrees of height: close, close-mid, open-mid, and open
- these distinctions provide eight reference points, numbered from 1 to 8, known as the Primary Cardinal Vowels

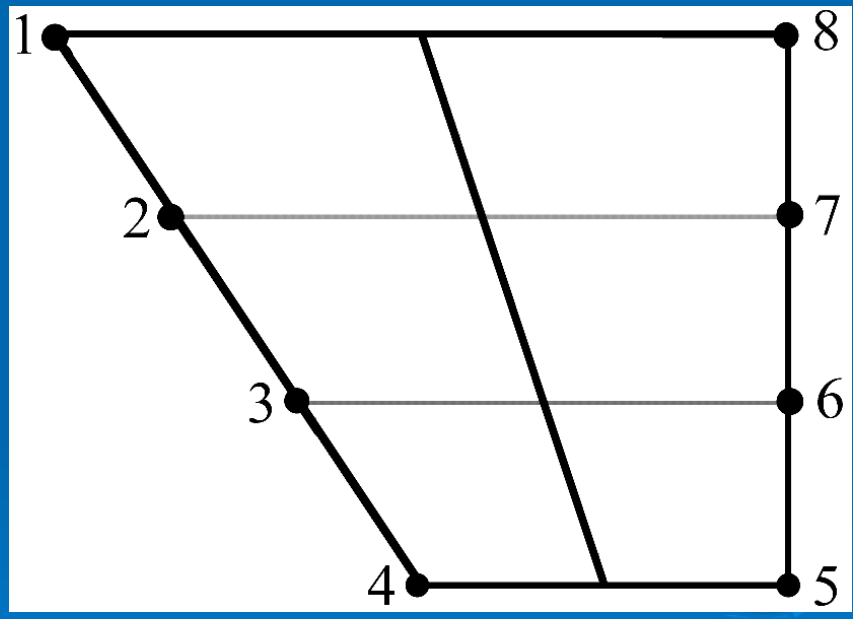

# Secondary Cardinal Vowels

- In addition to these, there is a second set

# Secondary Cardinal Vowels

- In addition to these, there is a second set
- it has the opposite values for lip rounding

# Secondary Cardinal Vowels

- In addition to these, there is a second set
- it has the opposite values for lip rounding
- referred to as the Secondary Cardinal Vowels

# Secondary Cardinal Vowels

- In addition to these, there is a second set
- it has the opposite values for lip rounding
- referred to as the Secondary Cardinal Vowels
- numbered from 9-16

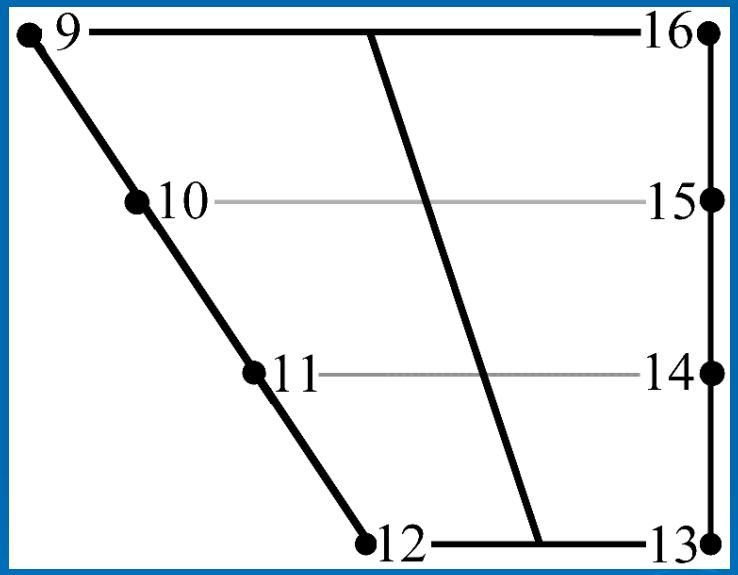

# Cardinal Vowels

- The symbols for the primary and secondary cardinal vowels are:

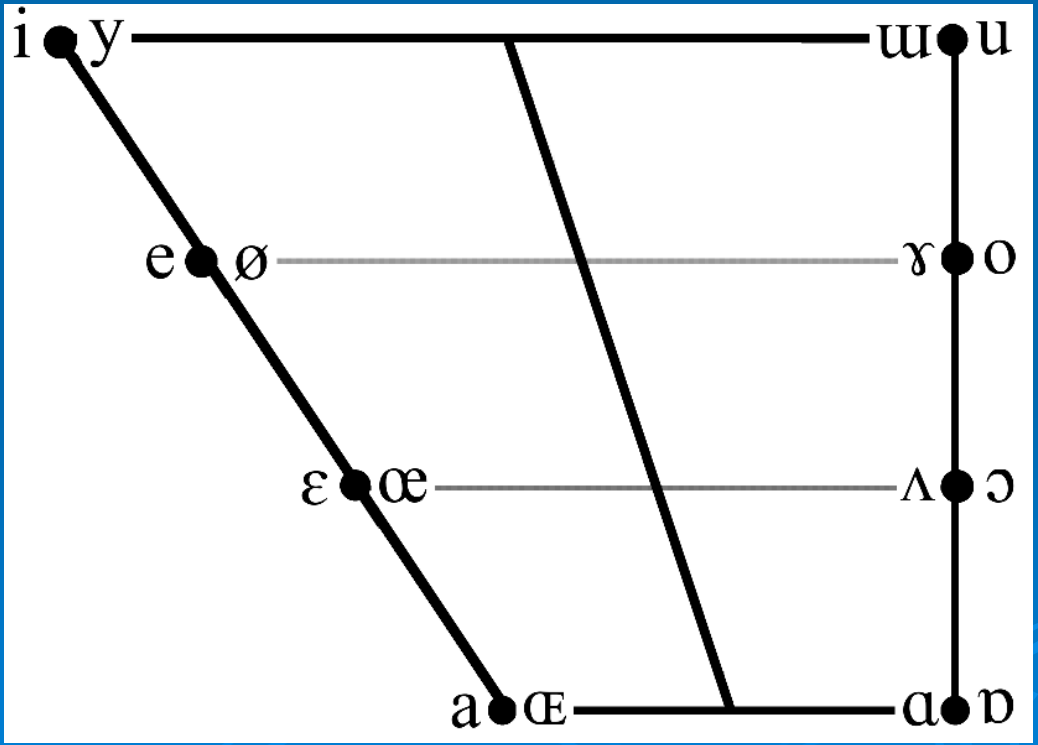

# Additional Cardinal Vowels

- there are some notable gaps in the system, in particular, in the center

# Additional Cardinal Vowels

- there are some notable gaps in the system, in particular, in the center
- these are covered by the Additional Cardinal Vowels

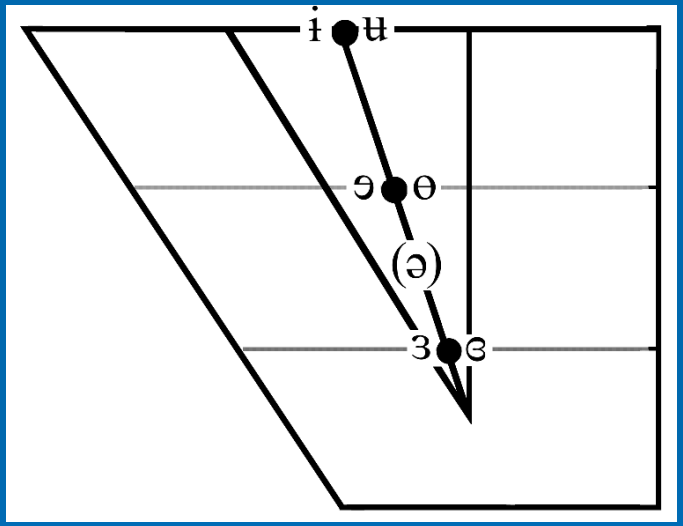

# Additional Cardinal Vowels

- there are some notable gaps in the system, in particular, in the center
- these are covered by the Additional Cardinal Vowels
- there are still vowels missing from the IPA chart, but these may be filled in with reference to the cardinal vowels

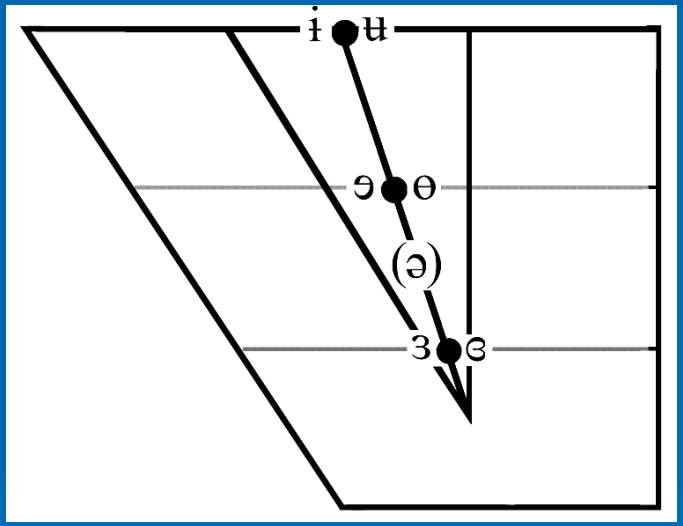

# Additional Cardinal Vowels

- there are some notable gaps in the system, in particular, in the center
- these are covered by the Additional Cardinal Vowels
- there are still vowels missing from the IPA chart, but these may be filled in with reference to the cardinal vowels
- [ə] is included in the chart since it is a very common vowel

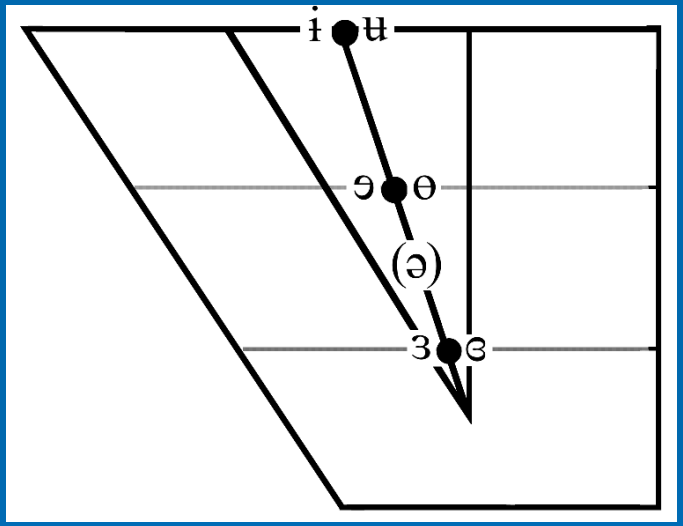

# Secondary Articulations

- Just as with the consonants, vowels may have further modifications that affect their pronunciation

# Secondary Articulations

- Just as with the consonants, vowels may have further modifications that affect their pronunciation
- these may be phonetic, phonemic, or morpho-phonemic

# Secondary Articulations

- Just as with the consonants, vowels may have further modifications that affect their pronunciation
- these may be phonetic, phonemic, or morpho-phonemic
- we discuss four main secondary effects applied commonly to vowels, beginning with vowel length

# Vowel Length

- In some languages vowel length is contrastive

# Vowel Length

- In some languages vowel length is contrastive
- the only difference between words being whether the vowel is held long or not

# Vowel Length

- In some languages vowel length is contrastive
- the only difference between words being whether the vowel is held long or not
- this is similar to consonant gemination, but applies specifically to vowels

# Nuuchahnulth Vowel Length

| | | | |
|---|---|---|---|
| yatʃ | `dogfish' | ya:tʃ | `warped, bent out' |
| wa | `to coil' | wa: | `to say' |
| mas | `healed up' | ma:s | `baking on open fire' |

# Nuuchahnulth Vowel Length

| | | | |
|---|---|---|---|
| yatʃ | `dogfish' | ya:tʃ | `warped, bent out' |
| wa | `to coil' | wa: | `to say' |
| mas | `healed up' | ma:s | `baking on open fire' |

- this example from Nuuchahnulth shows that vowel length is contrastive in the language

# Nuuchahnulth Vowel Length

| | | | |
|---|---|---|---|
| yatʃ | `dogfish' | yaːtʃ | `warped, bent out' |
| wa | `to coil' | waː | `to say' |
| mas | `healed up' | maːs | `baking on open fire' |

- this example from Nuuchahnulth shows that vowel length is contrastive in the language
- if you don't maintain the difference between long and short vowels, you will make errors in the pronunciation of words

# Korean Vowel Length

- It has been claimed that Korean has a limited degree of vowel length distinctions

# Korean Vowel Length

- It has been claimed that Korean has a limited degree of vowel length distinctions
- only in the first syllable of the word

| | | | | | |
|---|---|---|---|---|---|
| mal | 말 | `horse' | ma:l | 말 | `language' |
| pam | 밤 | `night' | pa:m | 밤 | `chestnut' |
| nun | 눈 | 'eye' | nu:n | 눈 | `snow' |

# Korean Vowel Length

- It has been claimed that Korean has a limited degree of vowel length distinctions
- only in the first syllable of the word

| | | | | | |
|---|---|---|---|---|---|
| mal | 말 | `horse' | ma:l | 말 | `language' |
| pam | 밤 | `night' | pa:m | 밤 | `chestnut' |
| nun | 눈 | 'eye' | nu:n | 눈 | `snow' |

- however, for many speakers of Korean, there is no length difference in such words

# English Phonetic Vowel Length

- In English, there are several kinds of vowel length

# English Phonetic Vowel Length

- In English, there are several kinds of vowel length
- first, there is phonetic vowel length which is the result of a voiced consonant appearing in the coda of a syllable

# English Phonetic Vowel Length

- In English, there are several kinds of vowel length
- first, there is phonetic vowel length which is the result of a voiced consonant appearing in the coda of a syllable
- thus, there is a phonetic difference in length in the pairs of words:

| | | | |
|---|---|---|---|
| beat | [bit] | bean | [biːn] |
| suit | [sut] | soothe | [suːð] |
| kit | [kʰɪt] | kid | [kʰɪːd] |

# English Phonemic V-Length

- many phonologists describe the distinction between English lax vowels, such as [ɪ] and [ʊ], and English tense vowels, such as [i] and [u], in terms of length

# English Phonemic V-Length

- many phonologists describe the distinction between English lax vowels, such as [ɪ] and [ʊ], and English tense vowels, such as [i] and [u], in terms of length
- words like *bit* [bɪt] or *soot* [sʊt] are described as having short [i] or [u], and words such as *beat* [biːt] or *suit* [suːt] are assigned long vowels [iː] or [uː]

# English Phonemic V-Length

- many phonologists describe the distinction between English lax vowels, such as [ɪ] and [ʊ], and English tense vowels, such as [i] and [u], in terms of length
- words like *bit* [bɪt] or *soot* [sʊt] are described as having short [i] or [u], and words such as *beat* [biːt] or *suit* [suːt] are assigned long vowels [iː] or [uː]
- this may be described as phonological vowel length

| | | | |
|---|---|---|---|
| bit | /bit/ | beat | /biːt/ |
| soot | /sut/ | suit | /suːt/ |

# English Phonemic V-Length

- many phonologists describe the distinction between English lax vowels, such as [ɪ] and [ʊ], and English tense vowels, such as [i] and [u], in terms of length
- words like *bit* [bɪt] or *soot* [sʊt] are described as having short [i] or [u], and words such as *beat* [biːt] or *suit* [suːt] are assigned long vowels [iː] or [uː]
- this may be described as phonological vowel length

| | | | |
|---|---|---|---|
| bit | /bit/ | beat | /biːt/ |
| soot | /sut/ | suit | /suːt/ |

- important to keep these two notions of vowel length separate

# Tense and Lax

- Another modification of the vowel system that is common in English is the distinction between tense and lax vowels

# Tense and Lax

- Another modification of the vowel system that is common in English is the distinction between tense and lax vowels
- Jones (1918) puts it in the following way:

Another element which is considered by many to be of importance in determining vowel quality is the state of the tongue and lips (more especially the former) as regards muscular tension. Vowels produced while the tongue is in a state of considerable muscular tension are called tense vowels. Those produced while the tongue is not in a state of muscular tension but is held loosely, are called lax vowels.

| Lax | | Tense | |
|---|---|---|---|
| bit | [bɪt] | beat | [bit] |
| soot | [sʊt] | suit | [sut] |
| bet | [bɛt] | bait | [beɪt] |
| bought | [bɔt] | boat | [boʊt] |

- the last two pairs are not strictly only lax/tense differences, since the tense vowels are actually diphthongs
- nevertheless, it is clear that there is a difference between such pairs of vowels

# Advanced Tongue Root

- A similar effect to the tense/lax distinction is that of Advanced Tongue Root (ATR)

# Advanced Tongue Root

- A similar effect to the tense/lax distinction is that of Advanced Tongue Root (ATR)
- this secondary articulation involves extending the tongue

# Advanced Tongue Root

- A similar effect to the tense/lax distinction is that of Advanced Tongue Root (ATR)
- this secondary articulation involves extending the tongue
- pairs such as [ɪ]/[i] are considered to involve stretching the tongue to a more extreme position

# Advanced Tongue Root

- A similar effect to the tense/lax distinction is that of Advanced Tongue Root (ATR)
- this secondary articulation involves extending the tongue
- pairs such as [ɪ]/[i] are considered to involve stretching the tongue to a more extreme position
- this feature has been found to operate in the vowel harmony systems of a number of languages

# Somali ATR

- in Somali, there is a harmony system that requires that all the vowels in a word agree for ATR

# Somali ATR

- in Somali, there is a harmony system that requires that all the vowels in a word agree for ATR
- the vowel pairs differing in ATR are:

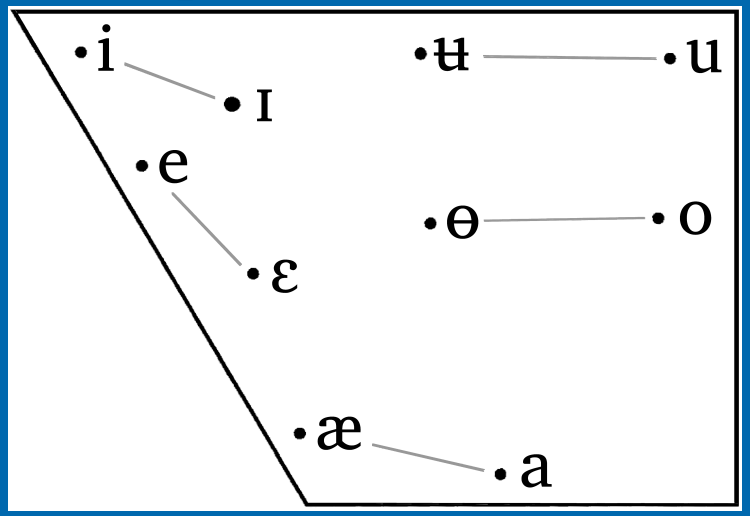

# Somali ATR

- in Somali, there is a harmony system that requires that all the vowels in a word agree for ATR
- the vowel pairs differing in ATR are:

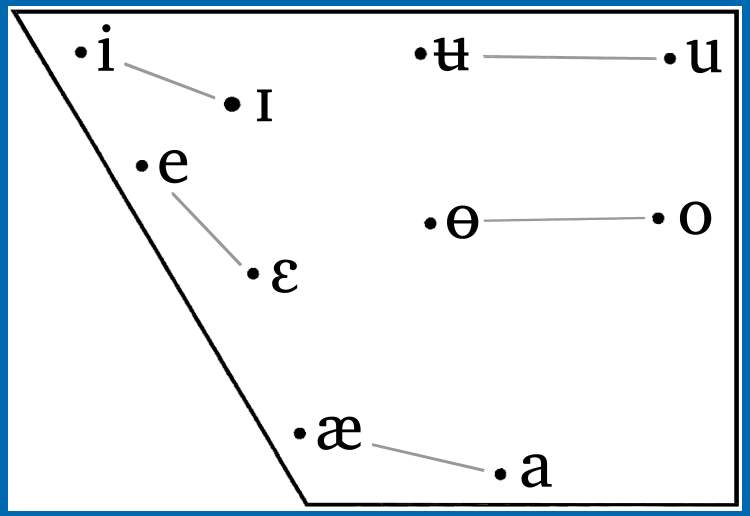


- in the words in the first column below, all the vowels are non-ATR, while in the second column, the vowels are all ATR

a. [dɪːday] `(I) fainted' [diːdæy] `(I) refused'

b. [qɵdɛːn] `(they) dug' [rogeːn] `(they) turned over'

# Nasalization

- The majority of vowels in the world's languages are what are referred to as oral vowels

# Nasalization

- The majority of vowels in the world's languages are what are referred to as oral vowels
- they are made with the air passing only through the mouth or oral cavity

# Nasalization

- The majority of vowels in the world's languages are what are referred to as oral vowels
- they are made with the air passing only through the mouth or oral cavity
- all languages have this kind of vowel

# Nasalization

- The majority of vowels in the world's languages are what are referred to as oral vowels
- they are made with the air passing only through the mouth or oral cavity
- all languages have this kind of vowel
- some languages have vowels made by lowering the velum to allow air through the nasal cavity

# Nasalization

- The majority of vowels in the world's languages are what are referred to as oral vowels
- they are made with the air passing only through the mouth or oral cavity
- all languages have this kind of vowel
- some languages have vowels made by lowering the velum to allow air through the nasal cavity
- vowels of this sort are referred to as nasal vowels or nasalized vowels

# Nasal Vowels

- languages such as French and Navajo have contrastive nasal vowels

| | | | | | |
|---|---|---|---|---|---|
| [bɔ̃] | bon | `good (masc)' | [bɔ] | beau | `handsome' |
| [tõ] | ton | `tone' | [to] | tot | `soon' |
| [mõ] | mon | `my' | [mo] | mot | `word' |

# Nasal Vowels

- languages such as French and Navajo have contrastive nasal vowels

| | | | | | |
|---|---|---|---|---|---|
| [bɔ̃] | bon | `good (masc)' | [bɔ] | beau | `handsome' |
| [tõ] | ton | `tone' | [to] | tot | `soon' |
| [mõ] | mon | `my' | [mo] | mot | `word' |

- English does not have contrastive nasal vowels

# Nasal Vowels

- languages such as French and Navajo have contrastive nasal vowels

| | | | | | |
|---|---|---|---|---|---|
| [bɔ̃] | bon | `good (masc)' | [bɔ] | beau | `handsome' |
| [tõ] | ton | `tone' | [to] | tot | `soon' |
| [mõ] | mon | `my' | [mo] | mot | `word' |

- English does not have contrastive nasal vowels
- vowels may become nasalized in English when they are adjacent to nasal consonants

# Nasal Vowels

- languages such as French and Navajo have contrastive nasal vowels

| | | | | | |
|---|---|---|---|---|---|
| [bɔ̃] | bon | `good (masc)' | [bɔ] | beau | `handsome' |
| [tõ] | ton | `tone' | [to] | tot | `soon' |
| [mõ] | mon | `my' | [mo] | mot | `word' |

- English does not have contrastive nasal vowels
- vowels may become nasalized in English when they are adjacent to nasal consonants
- a word like *none*, may be pronounced with some degree of phonetic nasalization, [nʌ̃n]

# Nasal Vowels

- languages such as French and Navajo have contrastive nasal vowels

| | | | | | |
|---|---|---|---|---|---|
| [bɔ̃] | bon | `good (masc)' | [bɔ] | beau | `handsome' |
| [tõ] | ton | `tone' | [to] | tot | `soon' |
| [mõ] | mon | `my' | [mo] | mot | `word' |

- English does not have contrastive nasal vowels
- vowels may become nasalized in English when they are adjacent to nasal consonants
- a word like *none*, may be pronounced with some degree of phonetic nasalization, [nʌ̃n]
- this is completely predictable from the environment and is, therefore, non-contrastive

# Diphthongs

- Diphthongs are a kind of vowel that involves a complex articulation

# Diphthongs

- Diphthongs are a kind of vowel that involves a complex articulation
- 'diphthong' comes from Greek and means *di-* `two' + *phthongos* `voice, sound'

# Diphthongs

- Diphthongs are a kind of vowel that involves a complex articulation
- 'diphthong' comes from Greek and means *di-* `two' + *phthongos* `voice, sound'
- diphthongs combine two vowel qualities into a single segment

# Diphthongs

- Diphthongs are a kind of vowel that involves a complex articulation
- 'diphthong' comes from Greek and means *di-* `two' + *phthongos* `voice, sound'
- diphthongs are vowels that combine two vowel qualities into a single segment
- they are similar to affricates, i.e., consonants made up of two parts, e.g., [ʧ] from [t] and [ʃ]

# Diphthongs

- Diphthongs are a kind of vowel that involves a complex articulation
- 'diphthong' comes from Greek and means *di-* `two' + *phthongos* `voice, sound'
- diphthongs are vowels that combine two vowel qualities into a single segment
- they are similar to affricates, i.e., consonants made up of two parts, e.g., [ʧ] from [t] and [ʃ]
- diphthongs are usually represented by combining the monophthongs that begin and end them

- *high* contains a diphthong [a] + [ɪ] → [haɪ]

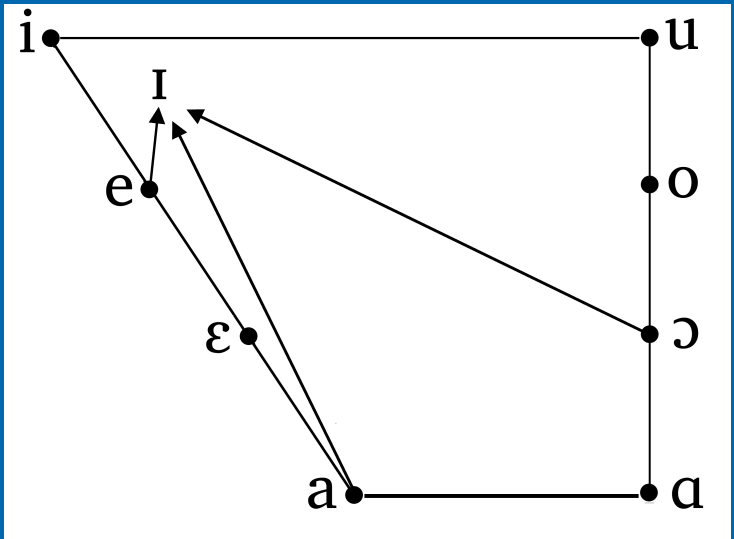

- *high* contains a diphthong [a] + [ɪ] → [haɪ]

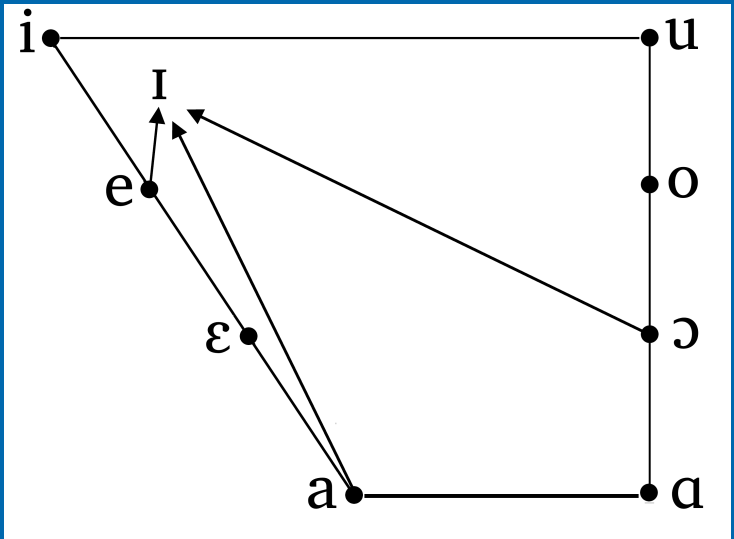


- *how* contains a diphthong [a] + [ʊ] → [haʊ]

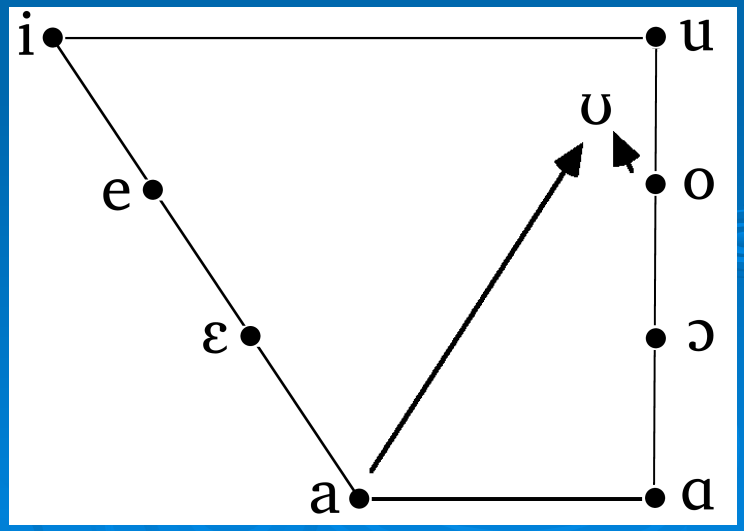

# Prominence

- When two vowels come together in this way, one vowel is always less prominent than the other

# Prominence

- When two vowels come together in this way, one vowel is always less prominent than the other
- if the first is less prominent, this as a rising diphthong, for example, *you* [ɪ̯u]

# Prominence

- When two vowels come together in this way, one vowel is always less prominent than the other
- if the first is less prominent, this as a rising diphthong, for example, *you* [i̯u]
- if the 2nd member is less prominent, then we call it a falling diphthong, e.g., [ai̯] in the word *high*

# Prominence

- When two vowels come together in this way, one vowel is always less prominent than the other
- if the first is less prominent, this as a rising diphthong, for example, *you* [ɪ̯u]
- if the 2nd member is less prominent, then we call it a falling diphthong, e.g., [aɪ̯] in the word *high*
- Korean does not have falling diphthongs like English [aɪ̯], except perhaps ㅡㅣ [ɨ̯i]

# Prominence

- When two vowels come together in this way, one vowel is always less prominent than the other
- if the first is less prominent, this as a rising diphthong, for example, *you* [ɪ̯u]
- if the 2nd member is less prominent, then we call it a falling diphthong, e.g., [aɪ̯] in the word *high*
- Korean does not have falling diphthongs like English [aɪ̯], except perhaps ㅢ [ɨ̯i]
- most speakers use [e] in the majority of contexts and others simplify it to [ɨ] or [i]

- when Korean speakers pronounce English words like *cake*, in order to replicate the English diphthong, they break it into two monophthongs, [a] and [i]

- when Korean speakers pronounce English words like *cake*, in order to replicate the English diphthong, they break it into two monophthongs, [a] and [i]
- these occupy two different syllables, [ke.ik]

- when Korean speakers pronounce English words like *cake*, in order to replicate the English diphthong, they break it into two monophthongs, [a] and [i]
- these occupy two different syllables, [ke.ik]
- this is, perhaps, a consequence of the absence of such diphthongs in Korean

# Syllabic Sonorants

- When we refer to syllabic sonorants, we actually mean syllabic sonorant consonants

# Syllabic Sonorants

- When we refer to syllabic sonorants, we actually mean syllabic sonorant consonants
- they are sonorant consonants, such as nasals or liquids, that function as the head of the syllable, i.e., like a vowel

# Syllabic Sonorants

- When we refer to syllabic sonorants, we actually mean syllabic sonorant consonants
- they are sonorant consonants, such as nasals or liquids, that function as the head of the syllable, i.e., like a vowel
- in Cantonese, syllabic nasals bear tone, just like vowels, and are contrastive phonologically

| | | | | | |
|---|---|---|---|---|---|
| a. | [m ˨˩] | 唔 | `not' | [m ˧˥] | 呣 | `huh?' |
| b. | [ŋ ˧˥] | 五 | `five' | [ŋ ˨˩] | 吳 | `Woo (surname)' |

# Syllabic Sonorants

- When we refer to syllabic sonorants, we actually mean syllabic sonorant consonants
- they are sonorant consonants, such as nasals or liquids, that function as the head of the syllable, i.e., like a vowel
- in Cantonese, syllabic nasals bear tone, just like vowels, and are contrastive phonologically

| | | | | | | |
|---|---|---|---|---|---|---|
| a. | [m ˧˩] | 唔 | `not' | [m ˧˥] | 呣 | `huh?' |
| b. | [ŋ ˨˦] | 五 | `five' | [ŋ ˧˩] | 吳 | `Woo (surname)' |

- a change of tone signals a change in meaning

# Syllabic Sonorants

- When we refer to syllabic sonorants, we actually mean syllabic sonorant consonants
- they are sonorant consonants, such as nasals or liquids, that function as the head of the syllable, i.e., like a vowel
- in Cantonese, syllabic nasals bear tone, just like vowels, and are contrastive phonologically

| | | | | | | |
|---|---|---|---|---|---|---|
| a. | [m ˧˩] | 唔 | `not' | [m ˧˥] | 呣 | `huh?' |
| b. | [ŋ ˨˦] | 五 | `five' | [ŋ ˧˩] | 吳 | `Woo (surname)' |

- a change of tone signals a change in meaning
- syllabic nasals act as vowels and are contrastive in Cantonese

# English Syllabic Sonorants

- In English, syllabic sonorant consonants are quite common

# English Syllabic Sonorants

- In English, syllabic sonorant consonants are quite common
- the nasals, [m] and [n], and the liquids, [l] and [ɹ], can all be syllabic

# English Syllabic Sonorants

- In English, syllabic sonorant consonants are quite common
- the nasals, [m] and [n], and the liquids, [l] and [ɹ], can all be syllabic
- English syllabic sonorants

| | | | |
|---|---|---|---|
| succumb | [sə'kʌm] | bosom | ['buːzm̩] |
| balloon | [bə'luːn] | basin | ['beɪsn̩] |
| control | [kən'tʰɹoʊɫ] | paddle | ['pʰæd̩l] |
| repair | [ɹə'pʰɛɹ] | copper | ['kʰɔp̩ɹ] |

- syllabic sonorant consonants are never stressed in English

- syllabic sonorant consonants are never stressed in English
- sonorant consonants may vary between being syllabic and non-syllabic

| Non-syllabic | | Syllabic | |
|---|---|---|---|
| lightning | ['laɪtnɪŋ] | lighten | ['laɪtn̩] |
| crackling | ['kʰɹæklɪŋ] | crackle | ['kʰɹæk̩l] |
| simplify | ['sɪmpləfaɪ] | simple | ['sɪmp̩l] |

- syllabic sonorant consonants are never stressed in English
- sonorant consonants may vary between being syllabic and non-syllabic

| Non-syllabic | | Syllabic | |
|---|---|---|---|
| lightning | ['laɪtnɪŋ] | lighten | ['laɪtn̩] |
| crackling | ['kʰɹæklɪŋ] | crackle | ['kʰɹæk̩l] |
| simplify | ['sɪmpləfaɪ] | simple | ['sɪmp̩l] |

- this demonstrates the potential variability in syllabification for sonorant consonants in English

# English Vowels

- English vowels may be divided into short and long

# English Vowels

- English vowels may be divided into short and long
- this equates with the traditional distinction of *lax* and *tense*

# English Vowels

- English vowels may be divided into short and long
- this equates with the traditional distinction of *lax* and *tense*
- we begin with short vowels because they are simpler to describe

# English Short Vowels

- there are short vowels at all vowel heights:

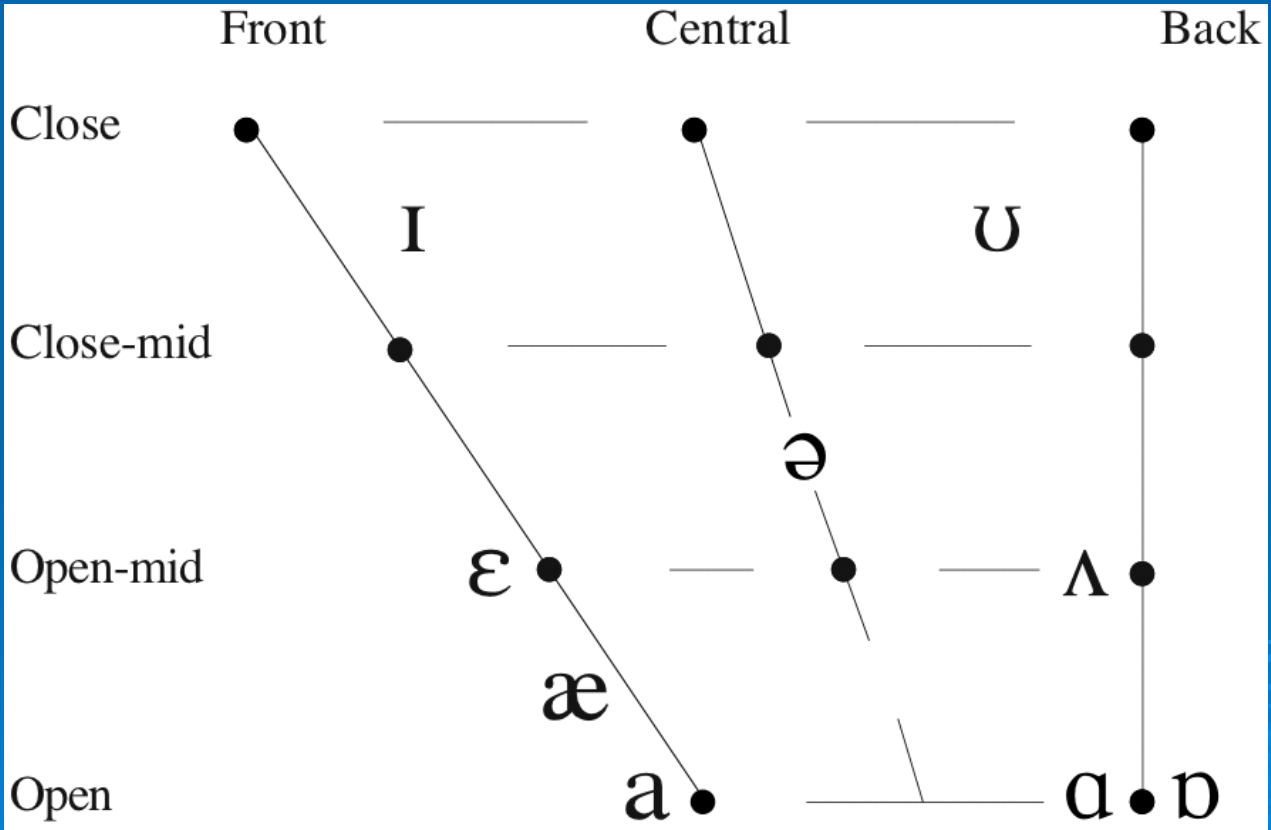

# Examples of Short Vowels

ɪ ship, bit, nip,
etc.

# Examples of Short Vowels

| | | | |
|---|---|---|---|
| ɪ | ship, bit, nip, etc. | ʊ | put, took, look, etc. |

# Examples of Short Vowels

| | | | |
|---|---|---|---|
| ɪ | ship, bit, nip, etc. | ʊ | put, took, look, etc |
| ɛ | bet, shed, lead, etc. | | |

# Examples of Short Vowels

| | | | |
|---|---|---|---|
| ɪ | ship, bit, nip, etc. | ʊ | put, took, look, etc |
| ɛ | bet, shed, lead, etc. | ʌ | shut, mud, bug, etc |

# Examples of Short Vowels

| | | | |
|---|---|---|---|
| ɪ | ship, bit, nip, etc. | ʊ | put, took, look, etc |
| ɛ | bet, shed, lead, etc. | ʌ | shut, mud, bug, etc |
| æ | cat, map, tan, etc | | |

# Examples of Short Vowels

| | | | |
|---|---|---|---|
| ɪ | ship, bit, nip, etc. | ʊ | put, took, look, etc |
| ɛ | bet, shed, lead, etc. | ʌ | shut, mud, bug, etc |
| æ | cat, map, tan, etc | ɑ | aunt, flaunt, taunt, etc |

# Schwa

- schwa, [ə], does not have a *contrastive* function in English

# Schwa

- schwa, [ə], does not have a *contrastive* function in English
- however, it is very frequent as the reduced form of vowels in the absence of stress:

nationalization
[nǽʃənəlaɪzéiʃən]

# Syllabic Sonorants

- sometimes consonants can act like vowels in English

| bottom | button | butter | bottle |
|---|---|---|---|
| [bɔɾm̩] | [bʌɾn̩] | [bʌɾɹ̩] | [bɔɾl̩] |

# Syllabic Sonorants

- sometimes consonants can act like vowels in English

| bottom | button | butter | bottle |
|---|---|---|---|
| [bɔɾm̩] | [bʌɾn̩] | [bʌɾɹ̩] | [bɔɾl̩] |

- in this case, the syllabic sonorant is short

# Long Vowels

- the long vowels equate with tense vowels

# Long Vowels

- the long vowels equate with tense vowels
- English has long vowels at various places

# Long Vowels

- the long vowels equate with tense vowels
- English has long vowels at various places
- often the stressed vowel is long

# English Long Vowels

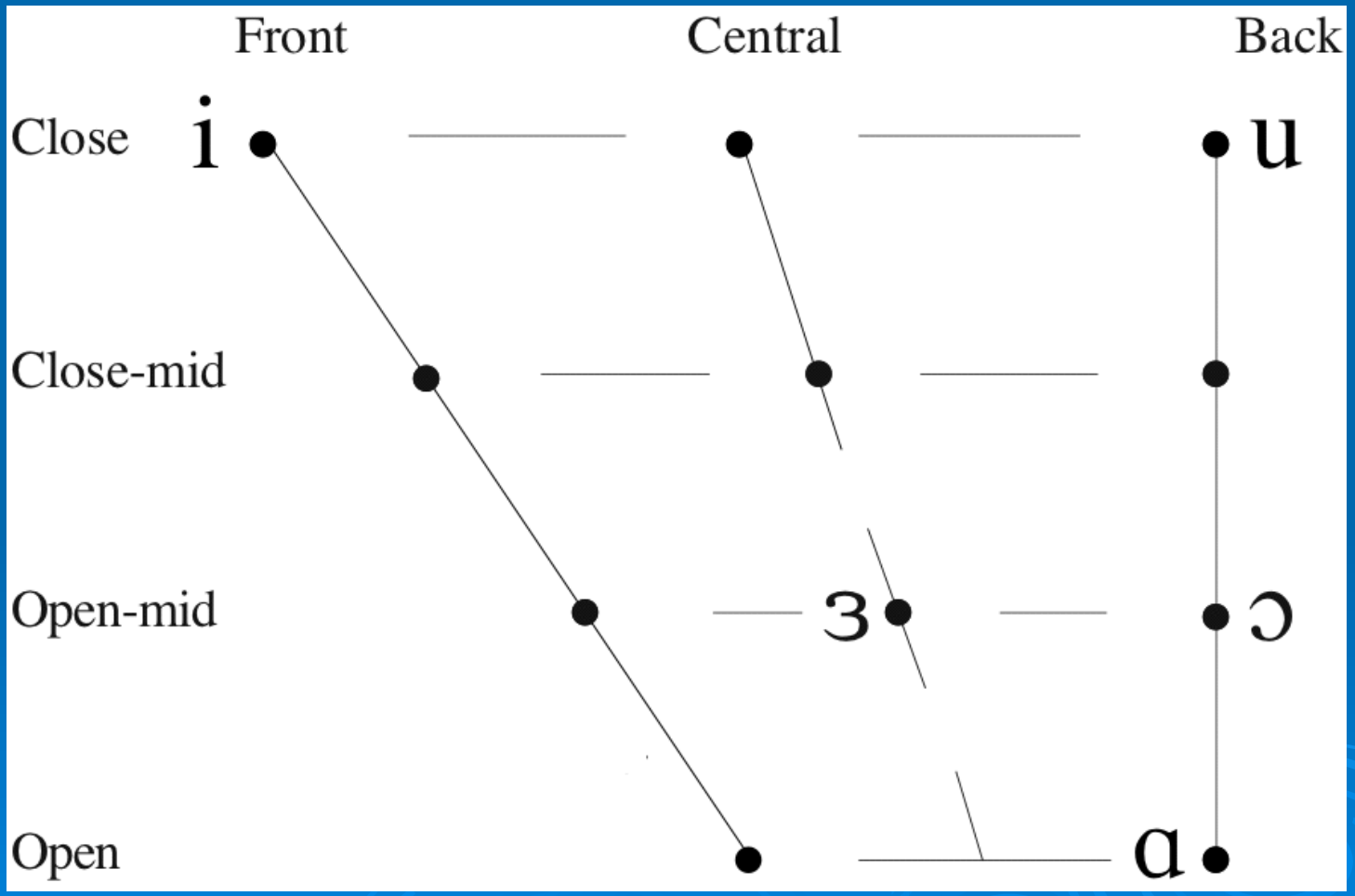

# Examples of Long Vowels

iː beat, seem,
teak, etc

# Examples of Long Vowels

| | | | |
|---|---|---|---|
| iː | beat, seem, teak, etc | uː | boot, soon, tune, etc |

# Examples of Long Vowels

| | | | |
|---|---|---|---|
| iː | beat, seem, teak, etc | uː | boot, soon, tune, etc |
| ɜː | bird, worm, etc | | |

# Examples of Long Vowels

| | | | |
|---|---|---|---|
| iː | beat, seem, teak, etc | uː | boot, soon, tune, etc |
| ɜː | bird, worm, etc | ɔː | pot, caught, etc |

# Examples of Long Vowels

| | | | |
|---|---|---|---|
| iː | beat, seem, teak, etc | uː | boot, soon, tune, etc |
| ɜː | bird, worm, etc | ɔː | pot, caught, etc |
| | | ɑː | aunt, taunt, etc |

# Diphthongs

- diphthongs consist of two vowel elements

# Diphthongs

- diphthongs consist of two vowel elements
- they are co-articulated, i.e. pronounced together

# Diphthongs

- diphthongs consist of two vowel elements
- they are co-articulated, i.e. pronounced together
- in both RP and GA, there are diphthongs with both [ɪ] and [ʊ] as the second member

# Diphthongs

- diphthongs consist of two vowel elements
- they are co-articulated, I.e. pronounced together
- in both RP and GA, there are diphthongs with both [ɪ] and [ʊ] as the second member
- because they have two vowels elements, they act like long vowels

# Diphthongs with [i]

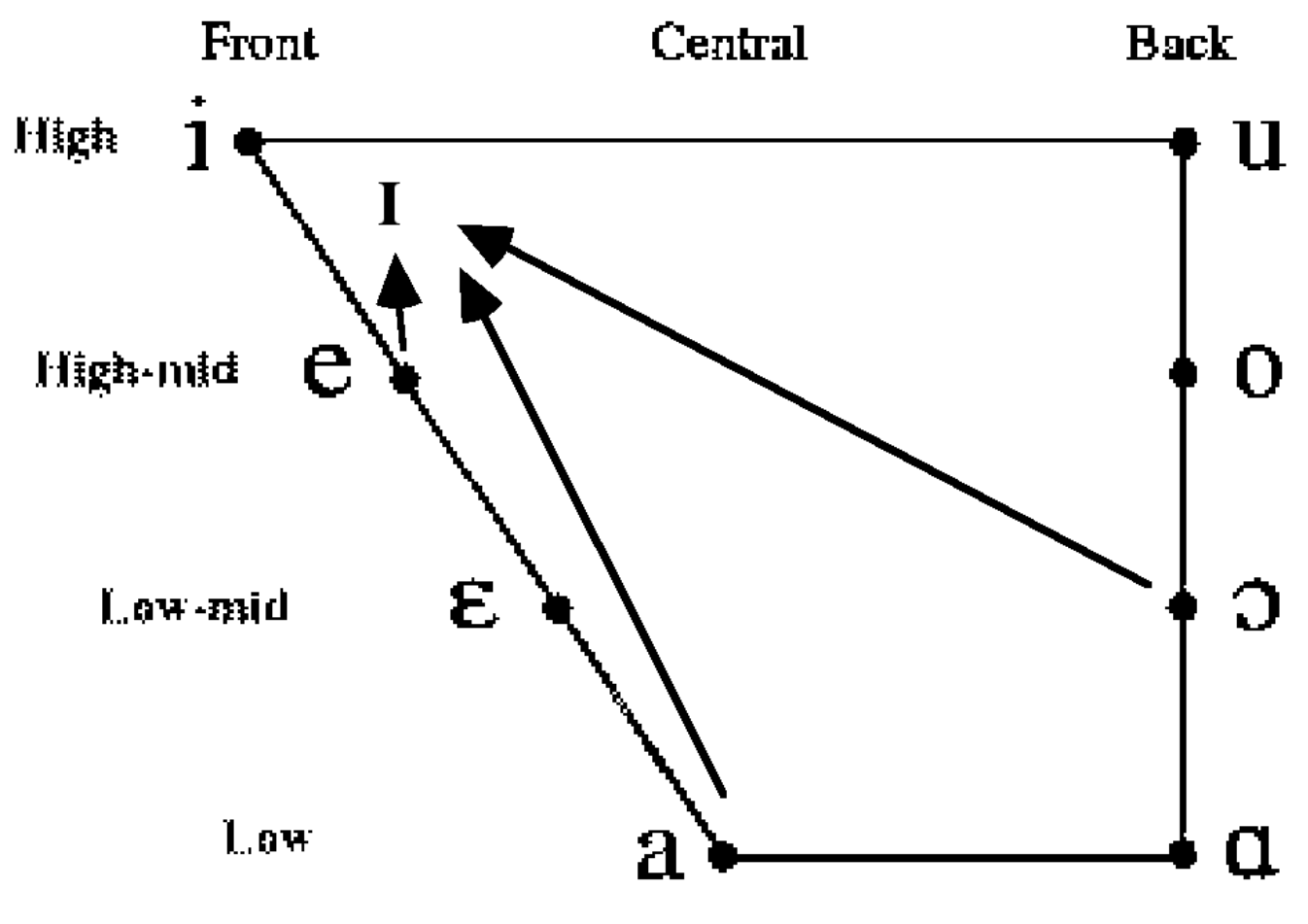

# Examples of /ɪ/ diphthongs

eɪ bay, say, sleigh, etc

# Examples of /i/ diphthongs

| | |
|---|---|
| eɪ | bay, say, sleigh, etc |
| aɪ | buy, sigh, cry, etc |

# Examples of /i/ diphthongs

| | |
|---|---|
| eɪ | bay, say, sleigh, etc |
| aɪ | buy, sigh, cry, etc |
| ɔɪ | boy, soy, toy, etc |

# Diphthongs with [ʊ]

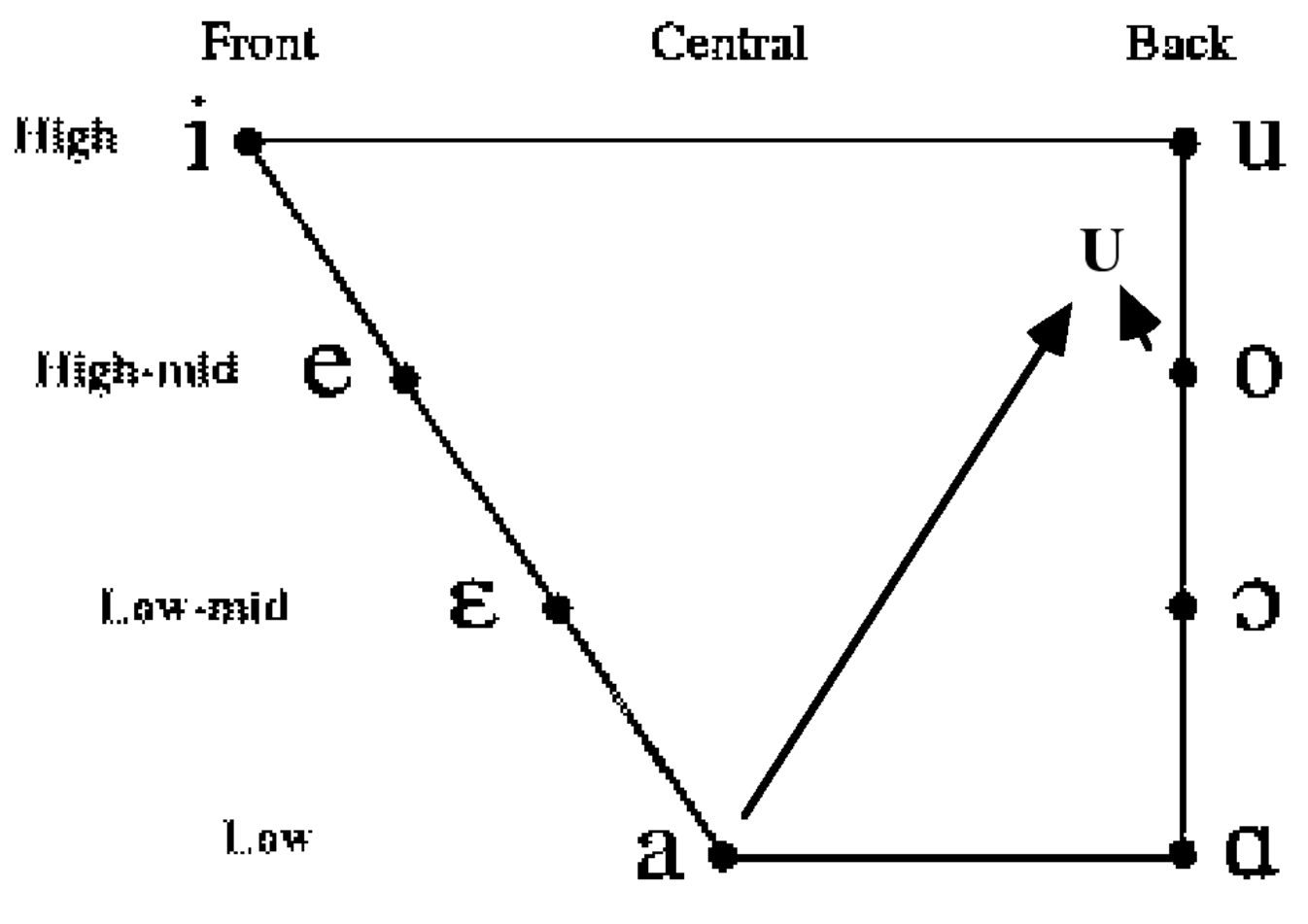

# Examples of /ʊ/ diphthongs

oʊ bow, sew, know, etc

# Examples of /ʊ/ diphthongs

| | |
|---|---|
| oʊ | bow, sew, know, etc |
| aʊ | cow, sow, plough, etc |

# ə Diphthongs

- only non-rhotic varieties of British English have the third type of diphthong

# ə Diphthongs

- only non-rhotic varieties of British English have the third type of diphthong
- this type of diphthong arises due to the loss of the /ɹ/ in such dialects

# Diphthongs with [ə]

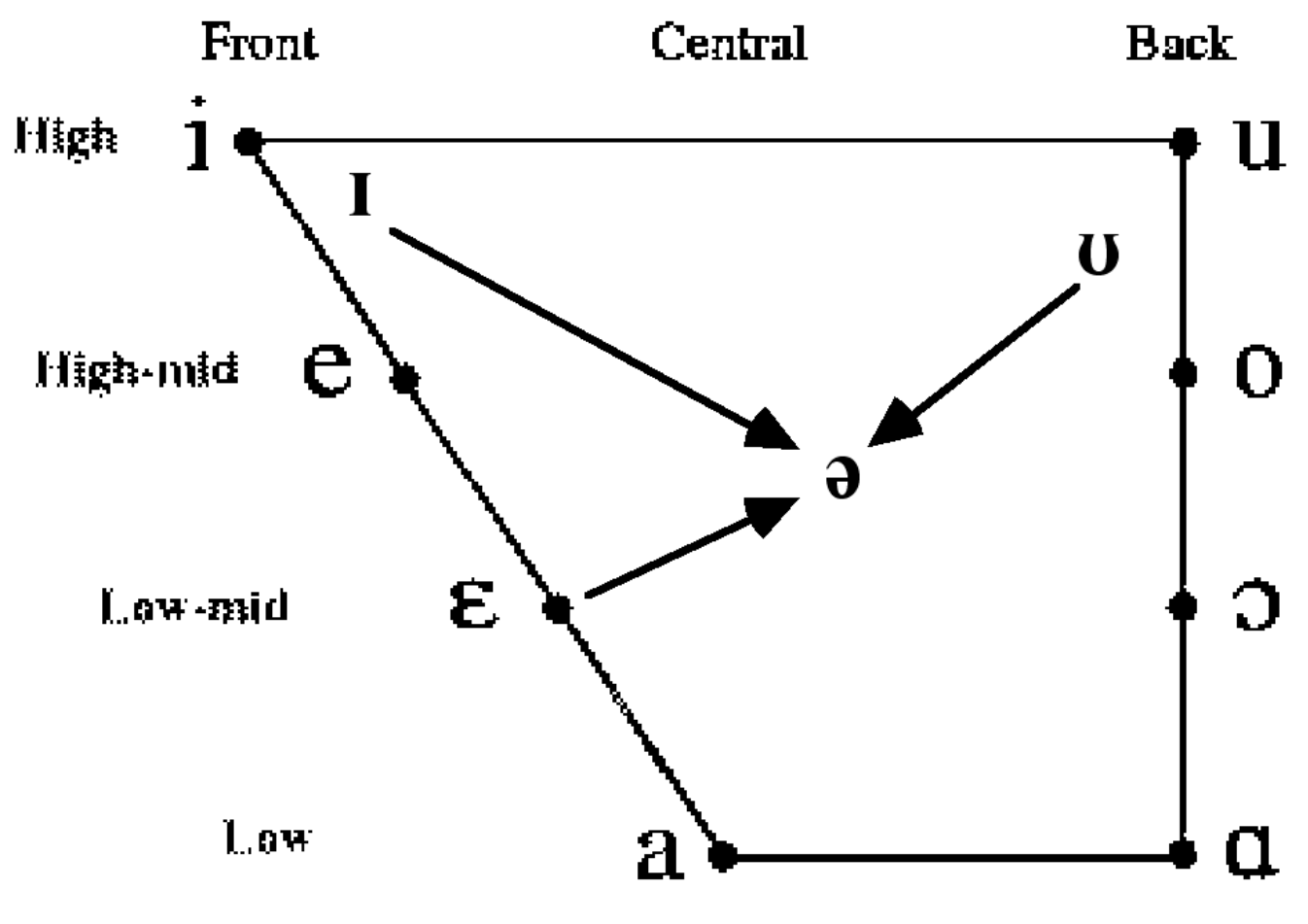

# Examples of /ə/ diphthongs

ɪə hear, beer, deer, etc

# Examples of /ə/ diphthongs

| | |
|---|---|
| ɪə | hear, beer, deer, etc |
| eə | air, bare, stare, etc |

# Examples of /ə/ diphthongs

| | |
|---|---|
| ɪə | hear, beer, deer, etc |
| eə | air, bare, stare, etc |
| uə | poor, tour, etc |

# Suprasegmental Features

- Suprasegmentals have to do with *prosody*

# Suprasegmental Features

- Suprasegmentals have to do with *prosody*
- this includes tone, stress, and pitch accent systems

# Suprasegmental Features

- Suprasegmentals have to do with *prosody*
- this includes tone, stress, and pitch accent systems
- it may also involve higher level phrasal and sentential intonation

# Suprasegmental Features

- Suprasegmentals have to do with *prosody*
- this includes tone, stress, and pitch accent systems
- it may also involve higher level phrasal and sentential intonation
- in English, stress is an important factor

# Tone Systems

- Tone systems are relatively common, especially in Asia, the Americas, and Sub-Saharan Africa

# Tone Systems

- Tone systems are relatively common, especially in Asia, the Americas, and Sub-Saharan Africa
- many varieties of tonal systems

# Tone Systems

- Tone systems are relatively common, especially in Asia, the Americas, and Sub-Saharan Africa
- many varieties of tonal systems
- all share one common property: the change of pitch can change the meaning

# Standard Chinese Tones

- a. [ma˥] ‘mother’
- b. [ma˧˥] ‘numb’
- c. [ma˨˩˦] ‘horse’
- d. [ma˥˩] ‘scold’

Note: ˥ indicates a high tone, ˧˥ a rising tone, ˨˩˦ a falling-rising tone, and ˥˩ a falling tone.

# Busan Korean

- According to Y.-H. Chung (2006):
  "monosyllables with a short vowel are high-toned and those with a long vowel are rising-toned."

| High Tone | Rising Tone |
|---|---|
| 말 [mal˥] 'horse' | 말 [mal˩˧] 'language' |
| 밤 [pam˥] 'nigh | 밤 [pam˩˧] 'chestnut' |
| 눈 [nun˥] 'eye' | 눈 [nun˩˧] 'snow' |

# Busan Korean

- According to Y.-H. Chung (2006):
  "monosyllables with a short vowel are high-toned and those with a long vowel are rising-toned."

| High Tone | Rising Tone |
|---|---|
| 말 [mal˥] 'horse' | 말 [mal˩˧] 'language' |
| 밤 [pam˥] 'nigh | 밤 [pam˩˧] 'chestnut' |
| 눈 [nun˥] 'eye' | 눈 [nun˩˧] 'snow' |

- However, for many speakers of Korean, there is no tone difference

# Stress

- a variation in pitch may be associated with a certain prominence in the word

# Stress

- a variation in pitch may be associated with a certain prominence in the word
- each word is assigned a single, most prominent syllable

# Stress

- a variation in pitch may be associated with a certain prominence in the word
- each word is assigned a single, most prominent syllable
- all other syllables are subordinate

# Stress

- a variation in pitch may be associated with a certain prominence in the word
- each word is assigned a single, most prominent syllable
- all other syllables are subordinate
- in such cases, the phenomenon is referred to as stress

# Predictable Stress

- There are different kinds of stress systems

# Predictable Stress

- There are different kinds of stress systems
- in some systems, stress is completely regular and predictable

# Predictable Stress

- There are different kinds of stress systems
- in some systems, stress is completely regular and predictable
- in French, stress is on the last syllable of a word

# Predictable Stress

- There are different kinds of stress systems
- in some systems, stress is completely regular and predictable
- in French, stress is on the last syllable of a word
- Hungarian stress is on the first syllable of the word

# Predictable Stress

- There are different kinds of stress systems
- in some systems, stress is completely regular and predictable
- in French, stress is on the last syllable of a word
- Hungarian stress is on the first syllable of the word
- in Polish, it is placed on the second syllable

# Predictable Stress

- There are different kinds of stress systems
- in some systems, stress is completely regular and predictable
- in French, stress is on the last syllable of a word
- Hungarian stress is on the first syllable of the word
- in Polish, it is placed on the second syllable
- the placement of stress can be a very useful indicator of the boundaries of words

# Other Types of Stress

- Some languages, particularly those that use tone, may not make very much use of stress

# Other Types of Stress

- Some languages, particularly those that use tone, may not make very much use of stress
- languages like English and Russian have variable stress

# Other Types of Stress

- Some languages, particularly those that use tone, may not make very much use of stress
- languages like English and Russian have variable stress
- it moves about in the word

# Other Types of Stress

- Some languages, particularly those that use tone, may not make very much use of stress
- languages like English and Russian have variable stress
- it moves about in the word
- stress should be viewed as a relative property, one that may have degrees such as primary or secondary or no stress at all

# Other Types of Stress

- Some languages, particularly those that use tone, may not make very much use of stress
- languages like English and Russian have variable stress
- it moves about in the word
- stress should be viewed as a relative property, one that may have degrees such as primary or secondary or no stress at all
- typically, there is only a single primary stress per word,

# Other Types of Stress

- Some languages, particularly those that use tone, may not make very much use of stress
- languages like English and Russian have variable stress
- it moves about in the word
- stress should be viewed as a relative property, one that may have degrees such as primary or secondary or no stress at all
- typically, there is only a single primary stress per word,
- there may be several secondary stresses depending on the length of the word

# Pitch Accent

- In some languages, a phenomenon exists that is between tone and stress

# Pitch Accent

- In some languages, a phenomenon exists that is between tone and stress
- there is only a single prominent syllable, but acts as a cue or anchor for a change in tonal pattern within the word

# Pitch Accent

- In some languages, a phenomenon exists that is between tone and stress
- there is only a single prominent syllable, but acts as a cue or anchor for a change in tonal pattern within the word
- this is described as pitch accent

# Pitch Accent

- In some languages, a phenomenon exists that is between tone and stress
- there is only a single prominent syllable, but acts as a cue or anchor for a change in tonal pattern within the word
- this is described as pitch accent
- it is a property of languages like Japanese, Serbo-Croatian, and perhaps some varieties of Korean

# Tsuruoka Japanese

- In the Tsuruoka dialect of Japanese, pitch accent contrasts exist

# Tsuruoka Japanese

- In the Tsuruoka dialect of Japanese, pitch accent contrasts exist
- there is a difference between *unaccented*, *initial*, *medial*, and *final* accent

| | | | |
|---|---|---|---|
| a. Unaccented | •••̲ | sakana (to) | 'fish (and)' |
| b. Initial | ••• | kabuto (to) | 'helmet (and)' |
| c. Medial | •••́ | kokoro (to) | 'heart (and)' |
| d. Final | ••́• | ata̲ma | 'head' |
| | ••́• | atama̲to | 'head and' |

# Tsuruoka Japanese

- In the Tsuruoka dialect of Japanese, pitch accent contrasts exist
- there is a difference between *unaccented*, *initial*, *medial*, and *final* accent
- this is not a property of individual syllables, but rather of the phonological phrase as a whole

| | | | |
|---|---|---|---|
| a. Unaccented | •••  | sakana (to) | 'fish (and)' |
| b. Initial | ́••• | kabuto (to) | 'helmet (and)' |
| c. Medial | •́•• | koko ro (to) | 'heart (and)' |
| d. Final | ••́• | ata ma | 'head' |
| | ••́• | atama to | 'head and' |

# Intonation

- Intonation is the variation of pitch over units larger than the word

# Intonation

- Intonation is the variation of pitch over units larger than the word
- typically the domain is the phrase or sentence

# Intonation

- Intonation is the variation of pitch over units larger than the word
- typically the domain is the phrase or sentence
- intonation may serve a variety of functions including the indication of various grammatical categories, and the demarcation of boundaries

# Intonation

- Intonation is the variation of pitch over units larger than the word
- typically the domain is the phrase or sentence
- intonation may serve a variety of functions including the indication of various grammatical categories, and the demarcation of boundaries
- the actual realization of intonation may vary from language to language

# Intonation

- Intonation is the variation of pitch over units larger than the word
- typically the domain is the phrase or sentence
- intonation may serve a variety of functions including the indication of various grammatical categories, and the demarcation of boundaries
- the actual realization of intonation may vary from language to language
- all languages make some use of intonation

# The End